CraftCan Duo Series

Yes, you're seeing double. The CraftCan Duo Series features Norland International's proprietary 16-valve, dual-fill design, allowing you to fill two sizes at once! Even at more than twice the speed of the CraftCan35, you won't sacrifice accuracy or reliability. Built with Norland's patented Servo Seamer and torque monitoring system, this canning line offers precision filling that is second to none.

Speed and Precision

- Completely independent dual production lanes
- Built-in CO_2 ports on one-piece stainless steel fill heads
- Rotary-can-indexing with on-screen micro-adjustments for precise can seam positioning
- Proprietary recipe recall feature reduces setup time
- Average DO pickup 15-25 PPB
- Nitrogen compatible

Servo Seamer Technology

- Patented Torque Monitoring system detects damaged cans, can misalignment, seam flaws, and gradual component wear
- System diagnostics available for remote troubleshooting

Post Rinse & Dryer Included

- Ensures cans are clean & dry for packaging or labeling

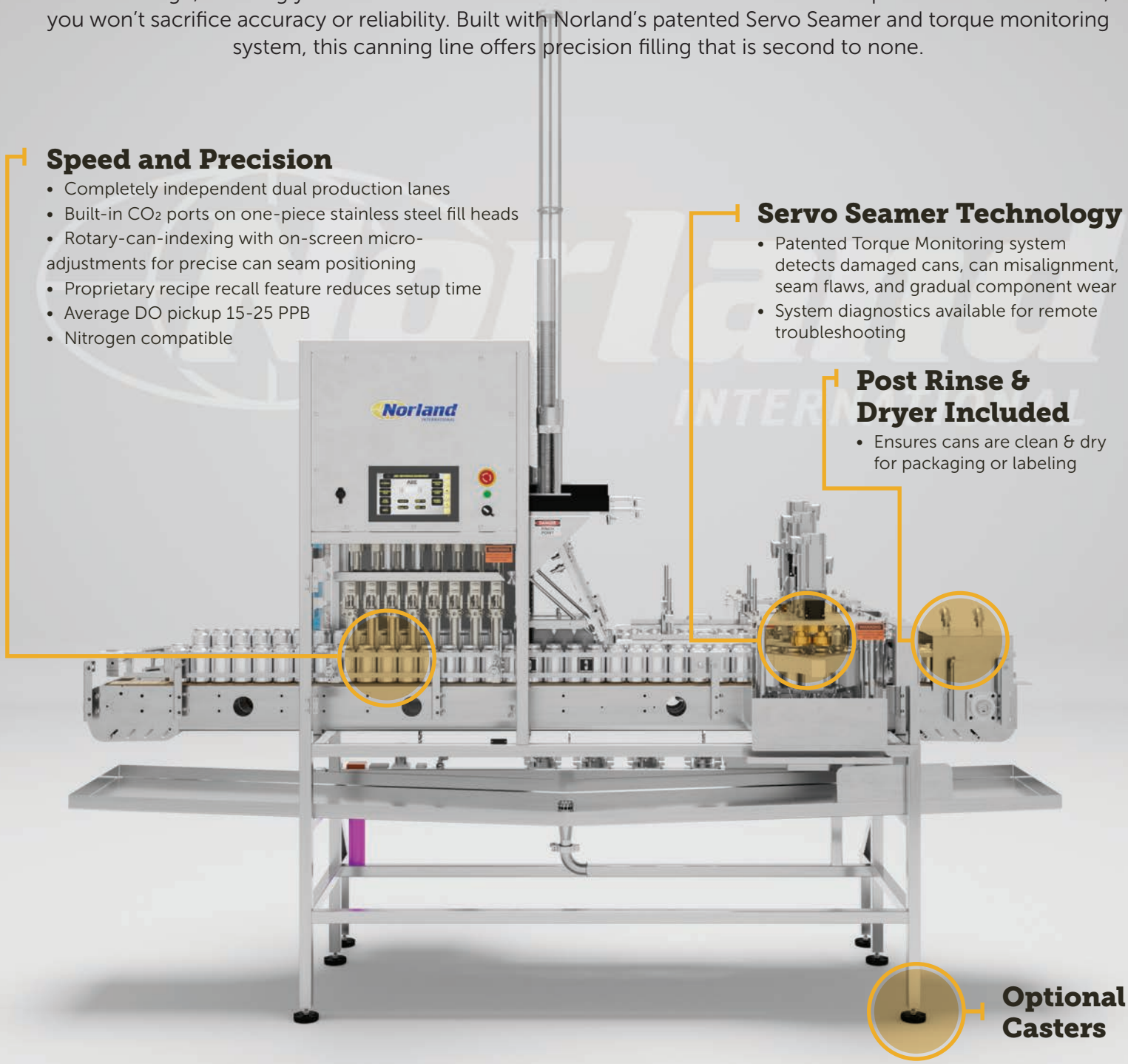

Optional Casters

Fills up to 90 Cans Per Minute

2001 SW 6th Street | Lincoln, NE 68522 | (402) 475-2337 | NorlandIntl.com

CraftCan Duo Series

General Specifications

- Up to 90 CPM (based on 12 oz can)
- System dimensions: L: 117" (297 cm), W: 44" (112 cm), H: 83" (211 cm)
- Electrical requirements: 208 V, 60 Hz, 1 Phase, 2 Wire, 25 A, 20 A (connected load), 4.2 kVA, 3.5 kW average (other electrical options available)
- UL508A compliant control panel
- Air Requirements: 1/2" MQC connection, clean dry CO_2, 5.75 SCFM, 100 psi
- Water Requirements: 3/4" FNPT connection, filtered city water, 3.0 GPM, 60 psi
- Specifications may vary based on size and customization

Compatible Bottles/Closures

- Standard US Sizes: 12 oz, 16 oz, 19.2 oz (24 oz options available)
- International Sizes: 330 ml, 355 ml, 375 ml, 440 ml, 500 ml, 568 ml
- Slim/Sleek: 250 ml slim, 8 oz sleek, 12 oz sleek
- Lids: CDL-E, CDL-W, CDL+, SuperEnd, SuperEndDA+, B64, ISE
- Other sizes available upon request

Your Complete Package

Each CraftCan Duo90 Canning Line that leaves our facility carries UL certification and an industry-leading five year limited warranty on the metal and welds. In addition to a comprehensive spare parts inventory, you'll receive superior customer support from our team in Lincoln, Nebraska with any Norland purchase.

Compatible Products

- YellowJacket Depalletizer
- Twist Rinse or Z-Rinse
- LabelMax Labeling Systems
- AutoPak Can Carrier
- And More!

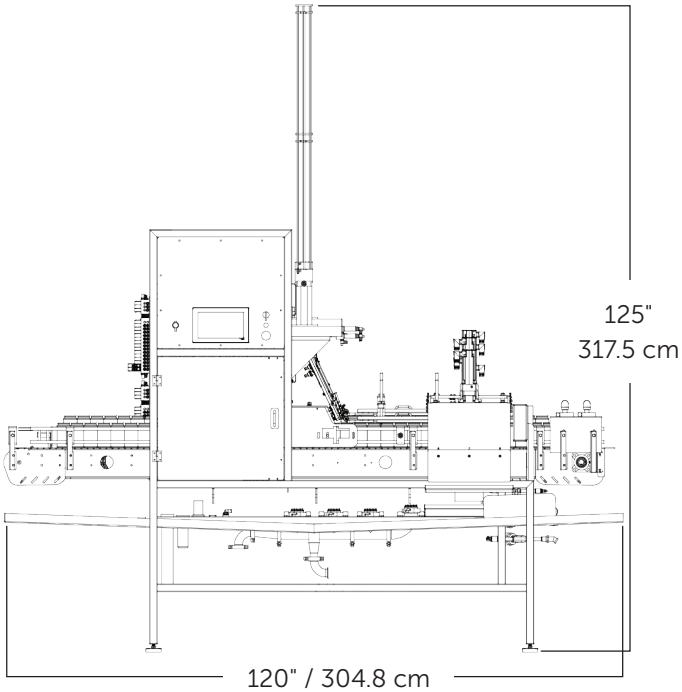

Norland International reserves the right to change specification without notice. All specifications are approximate. ©2026 Norland International